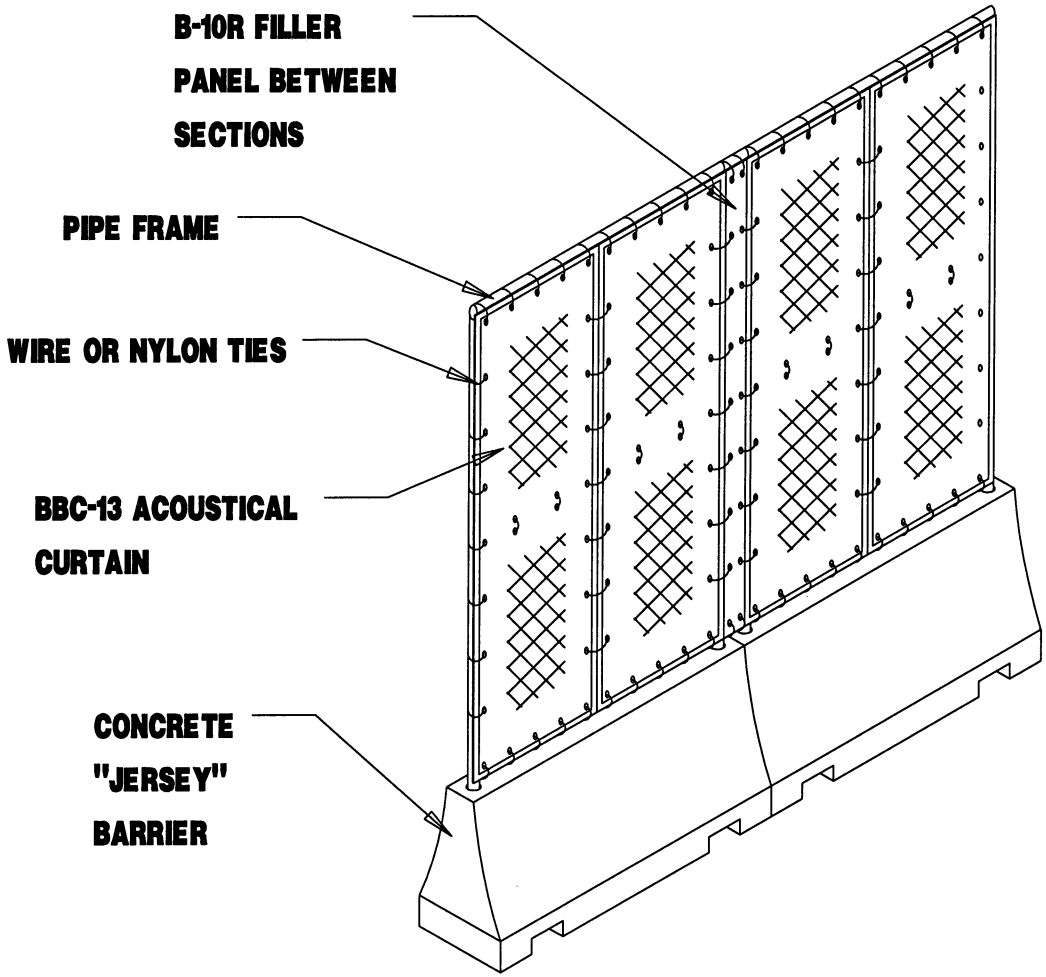

TEMPORARY CONSTRUCTION NOISE BARRIER

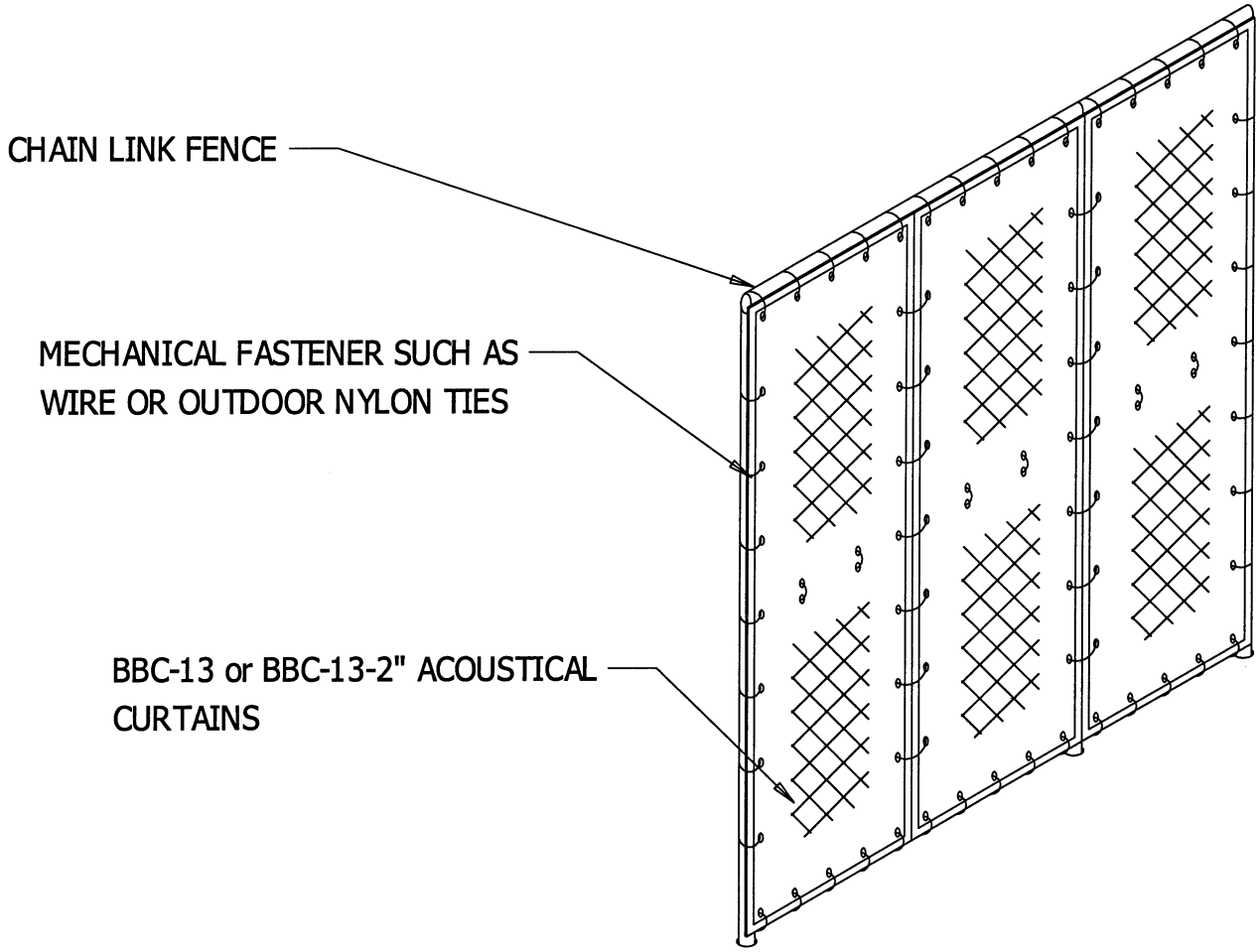

ATTACHMENT OF BBC-13 or BBC-13-2"
PANELS TO CHAIN LINK FENCE